FUJI ELECTRIC

SPLIT TYPE ROOM AIR CONDITIONER

WALL MOUNTED type

INVERTER

SERVICE MANUAL

Models	Indoor unit	Outdoor unit
	RSW-13V	ROW-13V

C O N T E N T S

SPECIFICATIONS 1
OUTLINE AND DIMENSIONS 3
REFRIGERANT SYSTEM DIAGRAM 4
CIRCUIT DIAGRAM 5
INDOOR PCB CIRCUIT DIAGRAM 6
OUTDOOR PCB CIRCUIT DIAGRAM 7
P.C. BOARD LAYOUTS 8
DISASSEMBLY ILLUSTRATION 15
PARTS LIST 18

splitoff.ru

Большая библиотека технической документации
http://splitoff.ru/tehn-doc.html
каталоги, инструкции, сервисные мануалы, схемы.

SPECIFICATIONS

TYPE	COOL & HEAT INVERTER
INDOOR UNIT	RSW-13V
OUTDOOR UNIT	ROW-13V
COOLING CAPACITY ( ) : Range (kW)	3.7 (1.03 - 4.0)
HEATING CAPACITY ( ) : Range (kW)	4.85 (0.8 - 6.1)

ELECTRICAL DATA

POWER SOURCE (V)		220 - 230
FREQUENCY (Hz)		50
RUNNING CURRENT (A)	COOLING	6.8 - 6.5 <Max. 8.0>
	HEATING	7.4 - 7.1 <Max. 10.0>
INPUT WATTS ( ) : Range (kW)	COOLING	1.48 (0.35 - 1.82)
	HEATING	1.61 (0.33 - 2.28)
EER (kW/kW)	COOLING	2.50
	HEATING	3.01
MOISTURE REMOVAL	ℓ/hr	1.8
AIR CIRCULATION - Hi (m^3/hr)	COOLING	560
	HEATING	620

COMPRESSOR

TYPE	Rotary type, Inverter, 2 pole, Three phase, Induction motor
CODE	2PV132N7BB02
REFRIGERANT R-22 (g)	950

FAN MOTOR

POWER SOURCE (V)			220 - 230
INDOOR UNIT	HI-SPEED (r.p.m.)	COOLING	1,320
		HEATING	1,420
	MED-SPEED (r.p.m.)	COOLING	1,210
		HEATING	1,260
	LO-SPEED (r.p.m.)	COOLING	1,100
		HEATING	1,150
OUTDOOR UNIT	(r.p.m.)	COOLING	740
		HEATING	770

DIMENSIONS

INDOOR UNIT	H x W x D (mm)	280 x 815 x 179
OUTDOOR UNIT		535 x 695 x 250

WEIGHTS

INDOOR UNIT	GROSS/NET (kg)	11/ 9
OUTDOOR UNIT		37 / 34

Все каталоги и инструкции здесь: http://splitoff.ru/tehn-doc.html

NOISE LEVEL

			COOLING	HEATING
INDOOR UNIT	HI-SPEED	(dB)	43	42
	MED-SPEED	(dB)	41	39
	LO-SPEED	(dB)	38	36
	QUIET	(dB)	34	30
OUTDOOR UNIT		(dB)	47 - 49	48 - 50

ADDITIONAL CHARGE OF REFRIGERANT

Refrigerant suitable for a piping length of 5 m, is charged in the outdoor unit at the factory.
When the piping is longer than 5 m, additional charging is necessary.
For the additional amount, see the table below.

Table

Pipe length	5 m	7 m	10 m
Additional refrigerant	None	32 g	80 g

Between 5 m and 10 m, when using a connection pipe other than that in the table, charge additional refrigerant with 16 g / 1 m as the criteria.

(The maximum length of the piping is 10 m. If the units are further apart than this, correct operation can not be guaranteed.)

Все каталоги и инструкции здесь: http://splitoff.ru/tehn-doc.html

OUTLINE AND DIMENSIONS

(Unit : mm)

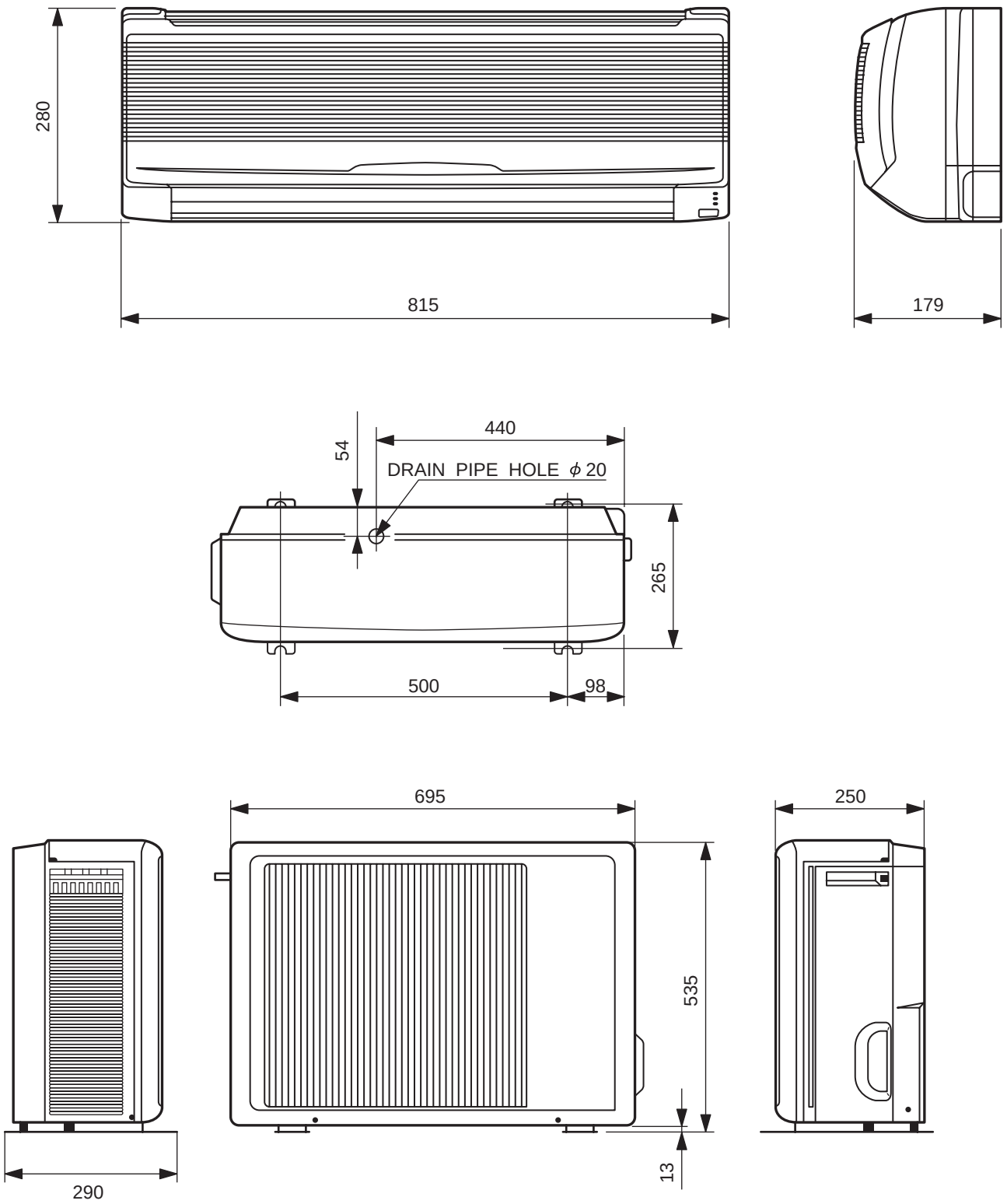

Все каталоги и инструкции здесь: http://splitoff.ru/tehn-doc.html

REFRIGERANT SYSTEM DIAGRAM

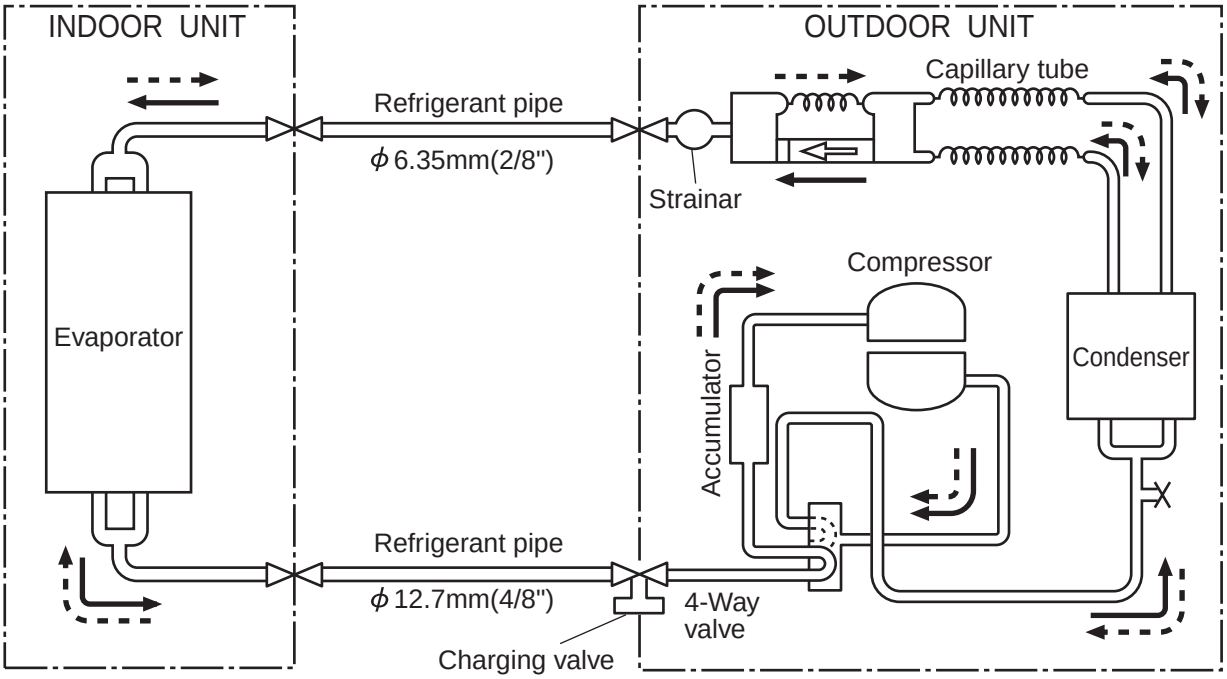

Cooling
Check valve
Heating
: Flare coupling

Все каталоги и инструкции здесь: http://splitoff.ru/tehn-doc.html

CIRCUIT DIAGRAM

INDOOR UNIT

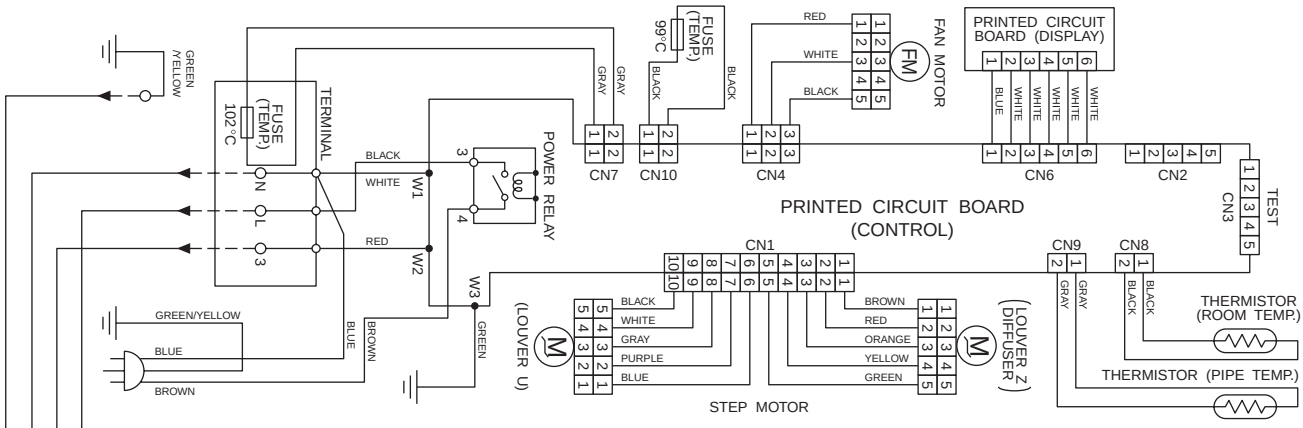

OUTDOOR UNIT

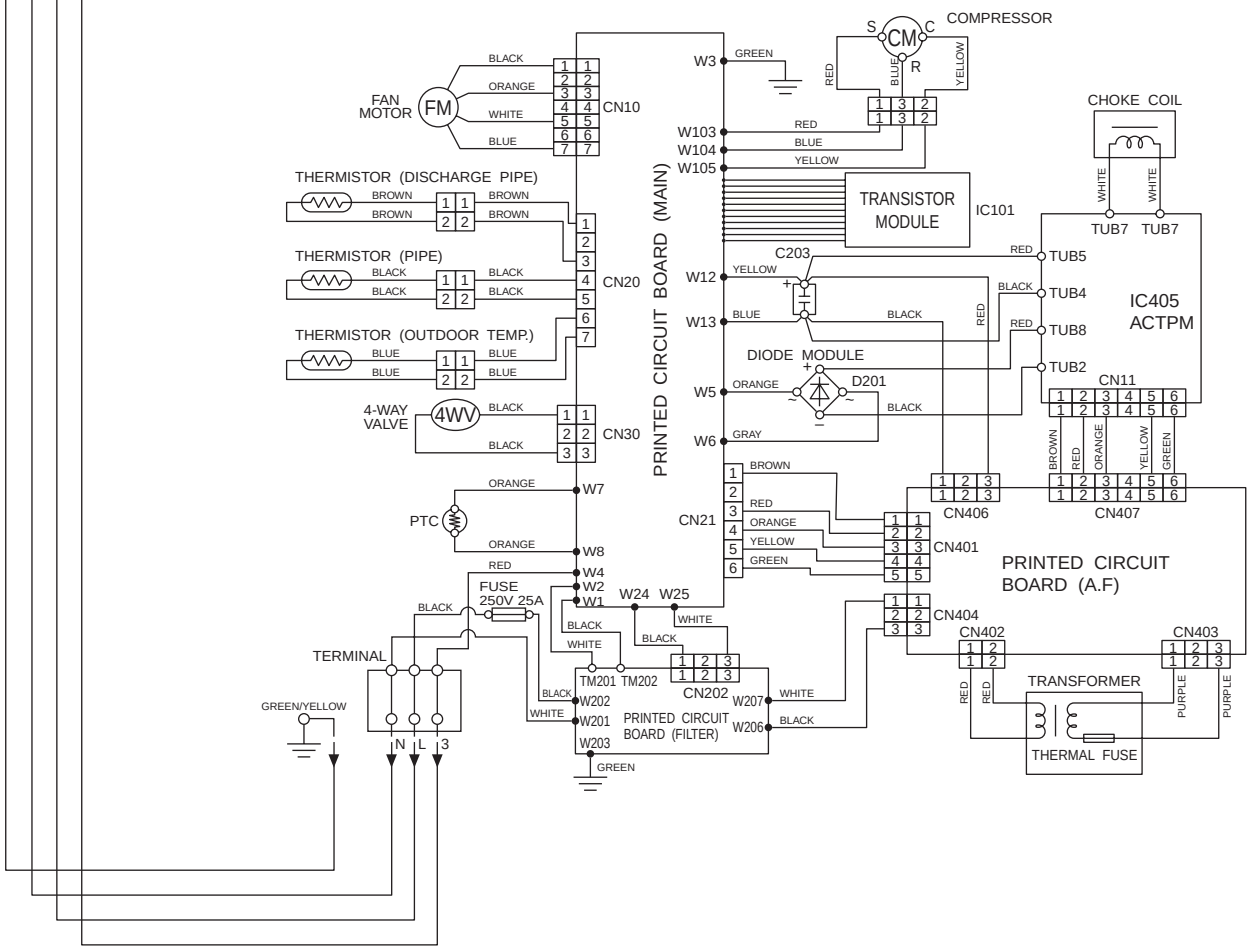

Все каталоги и инструкции здесь: http://splitoff.ru/tehn-doc.html

INDOOR PRINTED CIRCUIT BOARD
CIRCUIT DIAGRAM

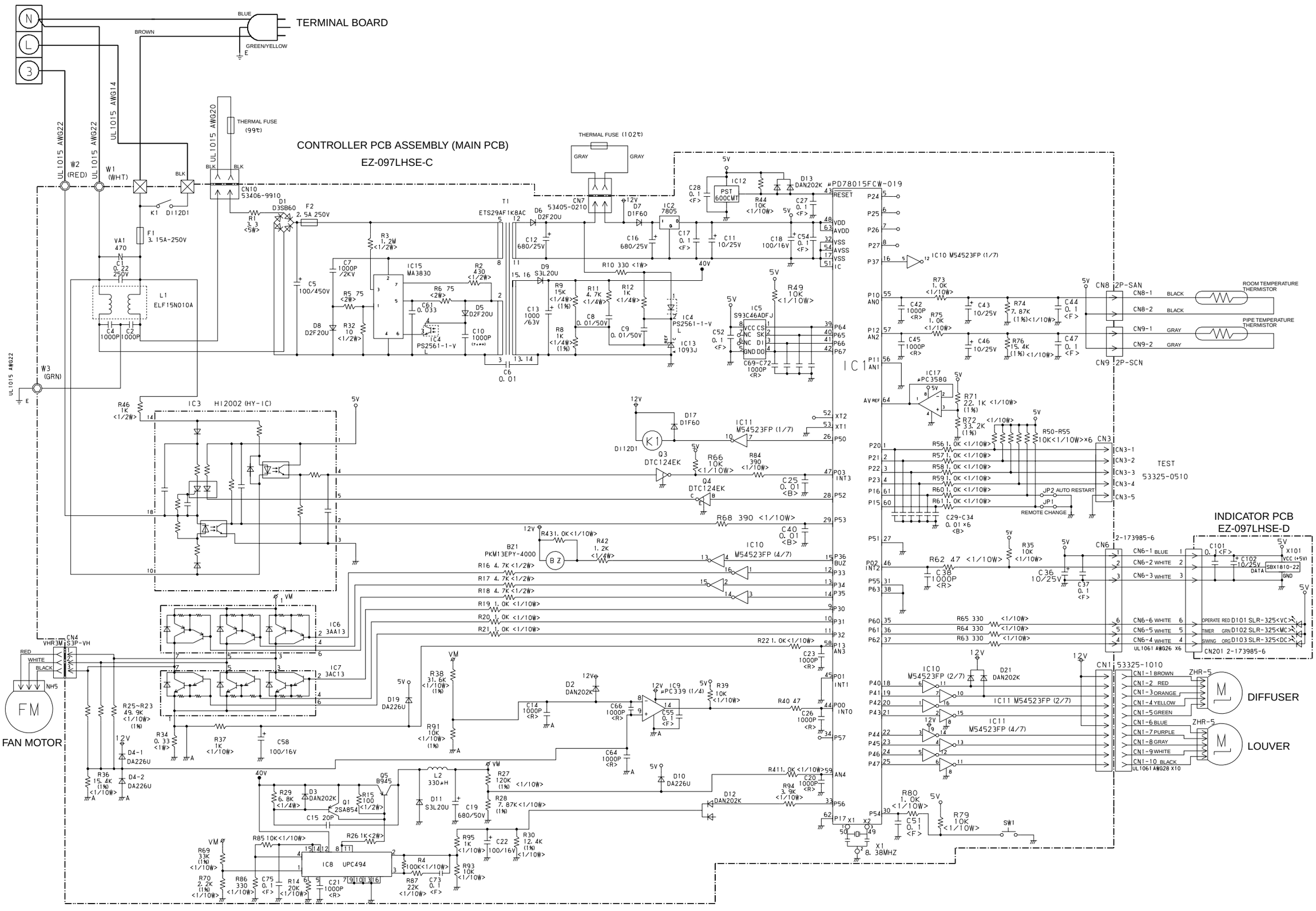

Все каталоги и инструкции здесь: http://splitoff.ru/tehn-doc.html

OUTDOOR PRINTED CIRCUIT BOARD
CIRCUIT DIAGRAM

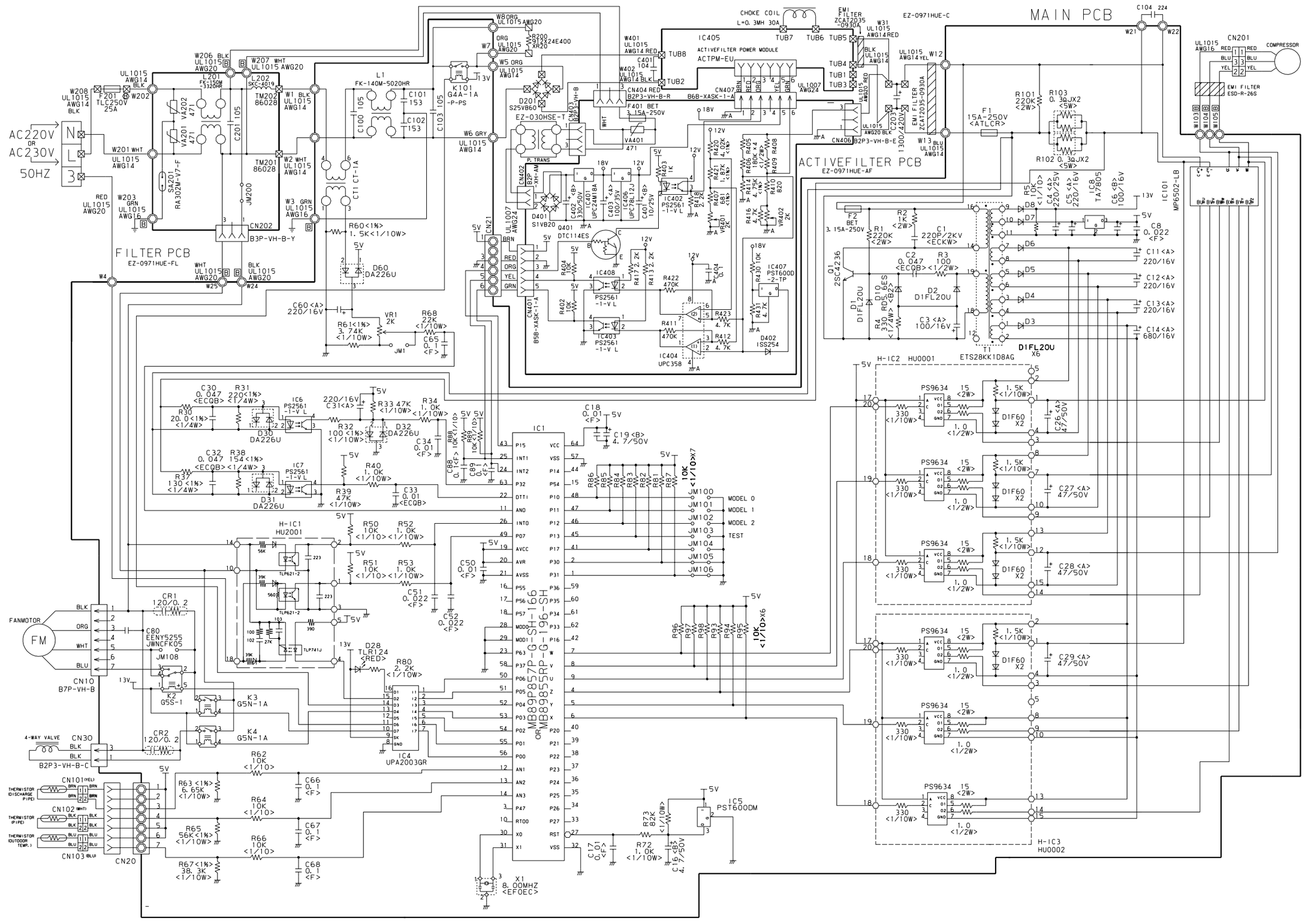

Все каталоги и инструкции здесь: http://splitoff.ru/tehn-doc.html

P.C. BOARD LAYOUTS

INVERTER PCB ASSEMBLY

(Viewed from the component side)

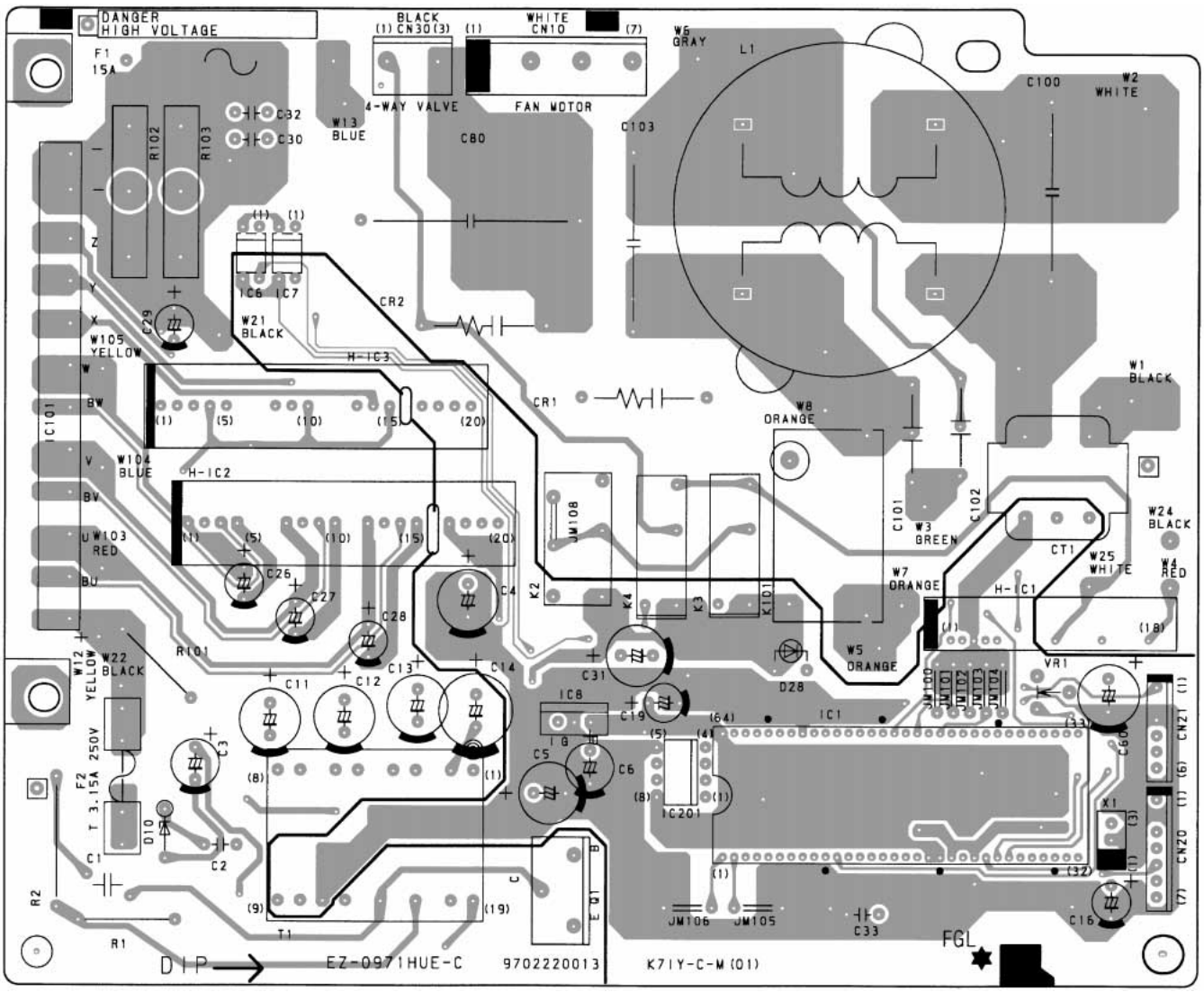

Все каталоги и инструкции здесь: http://splitoff.ru/tehn-doc.html

INVERTER PCB ASSEMBLY

(Viewed from the solder side)

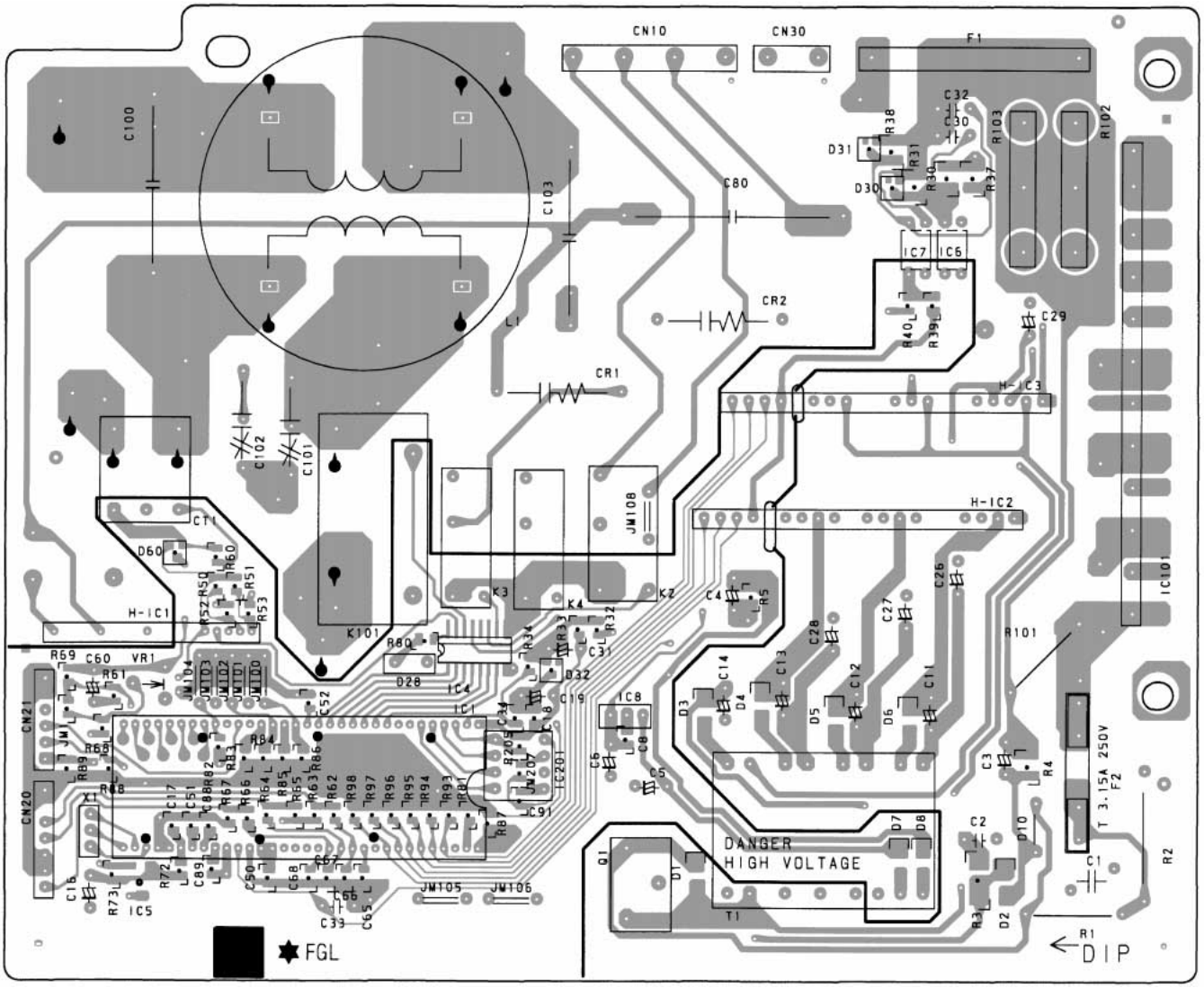

Все каталоги и инструкции здесь: http://splitoff.ru/tehn-doc.html

CONTROLLER PCB ASSEMBLY

(Viewed from the component side)

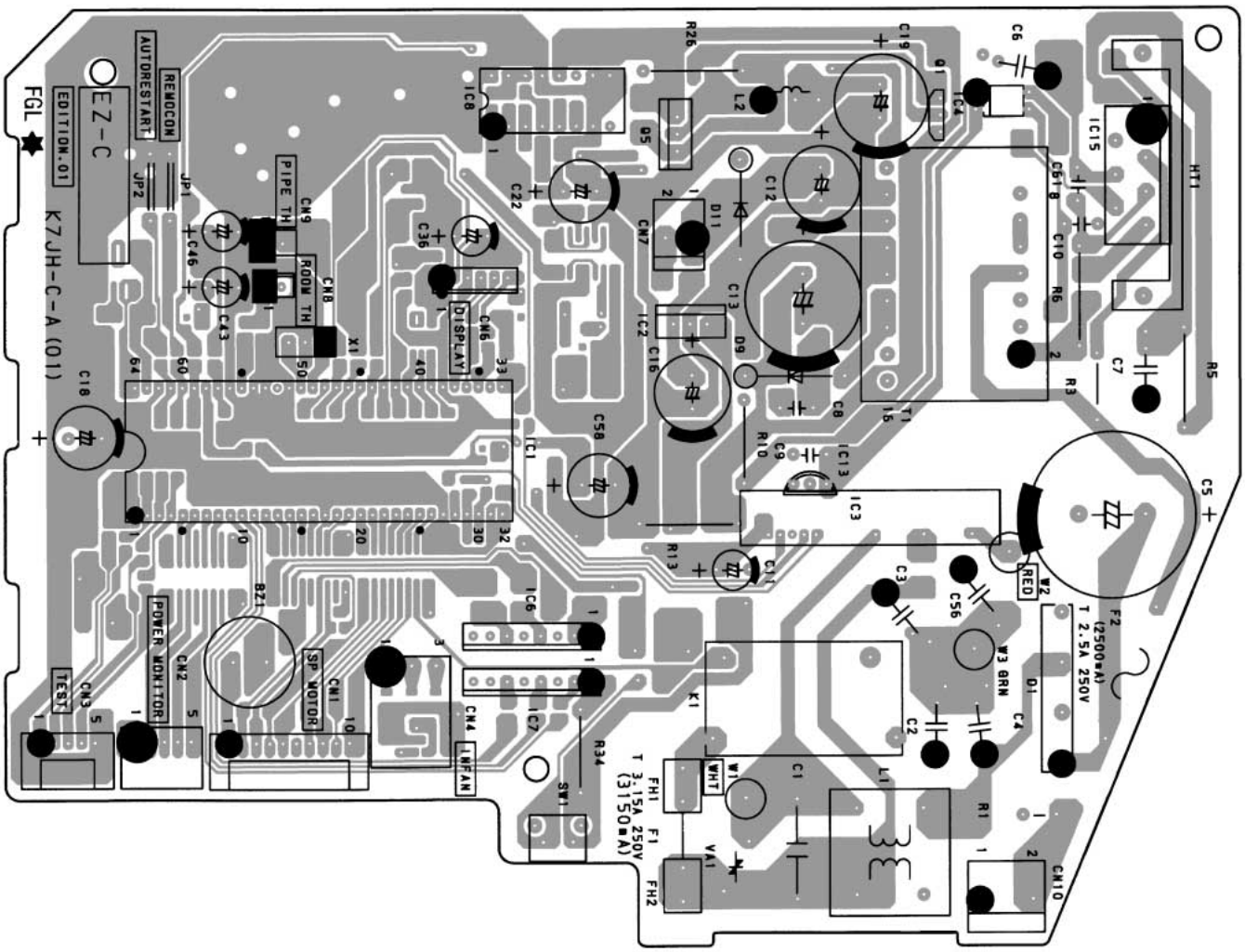

INDICATOR PCB ASSEMBLY

(Viewed from the component side)

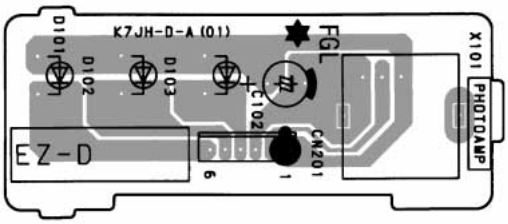

(Viewed from the solder side)

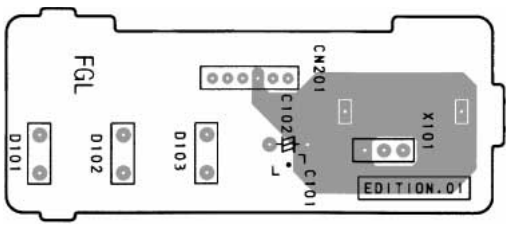

Все каталоги и инструкции здесь: http://splitoff.ru/tehn-doc.html

CONTROLLER PCB ASSEMBLY

(Viewed from the solder side)

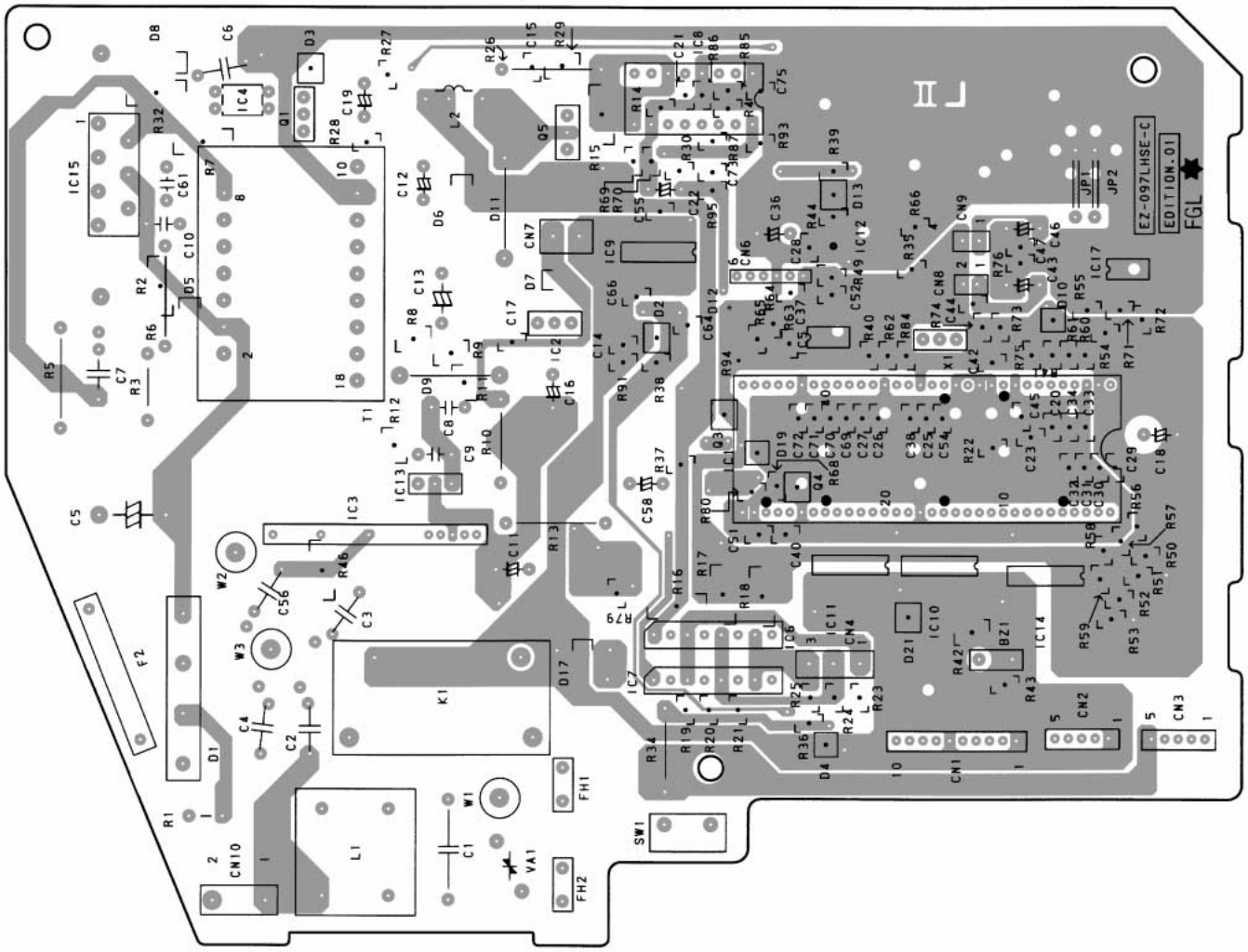

Все каталоги и инструкции здесь: http://splitoff.ru/tehn-doc.html

ACTIVE FILTER PCB ASSEMBLY

(Viewed from the component side)

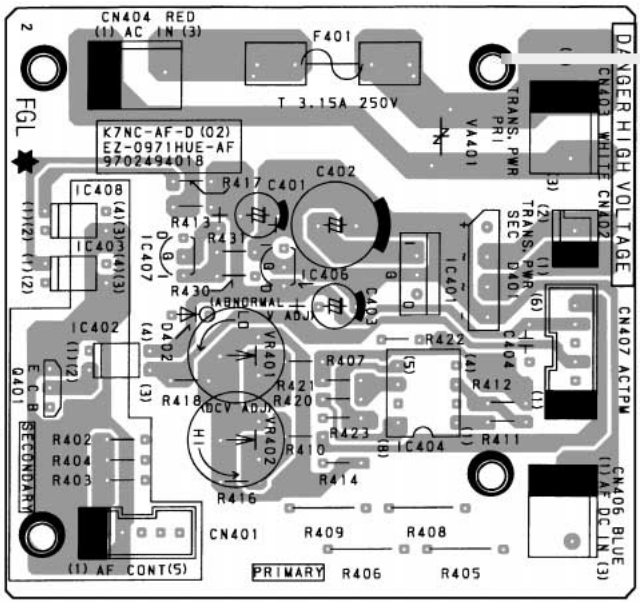

(Viewed from the solder side)

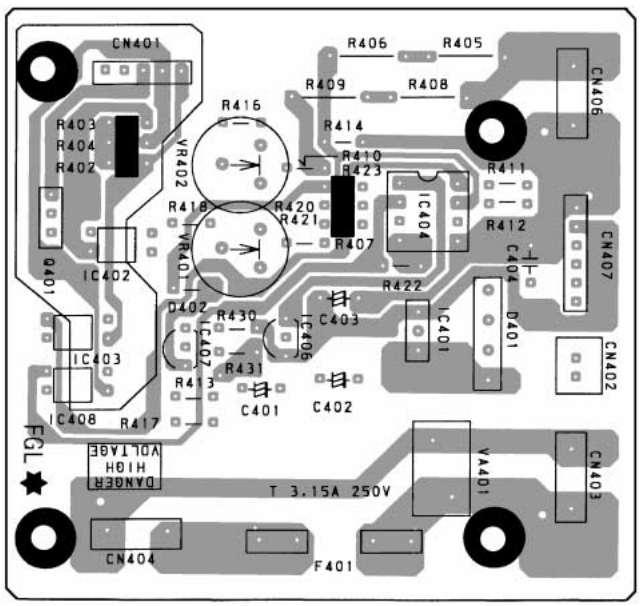

Все каталоги и инструкции здесь: http://splitoff.ru/tehn-doc.html

FILTER PCB ASSEMBLY

(Viewed from the component side)

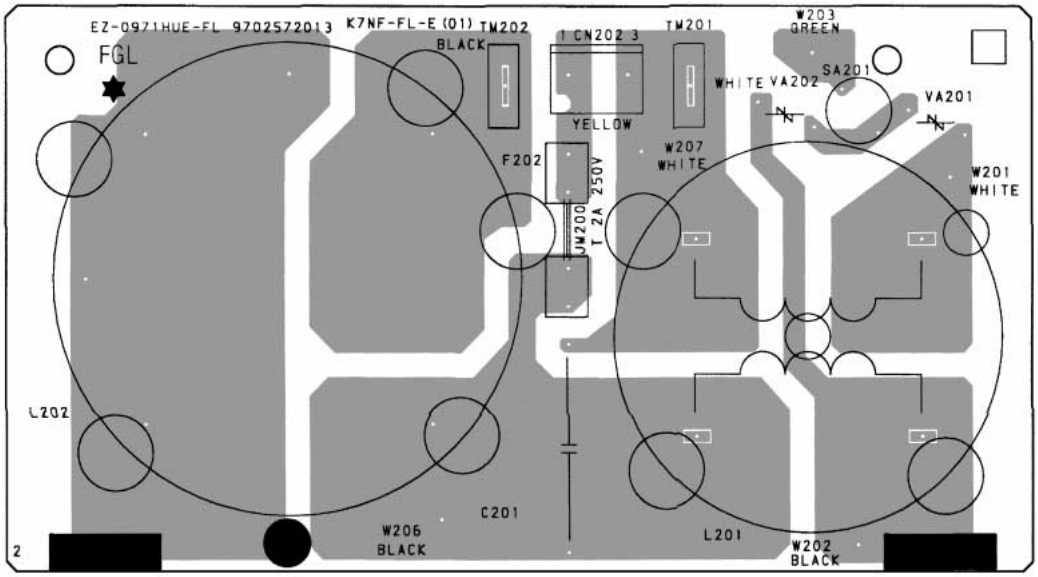

(Viewed from the solder side)

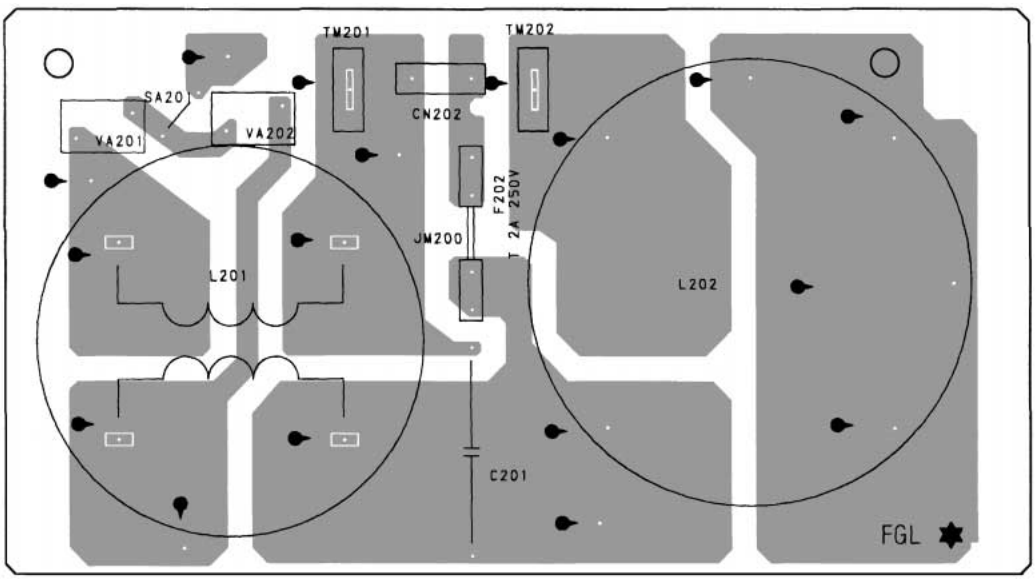

Все каталоги и инструкции здесь: http://splitoff.ru/tehn-doc.html

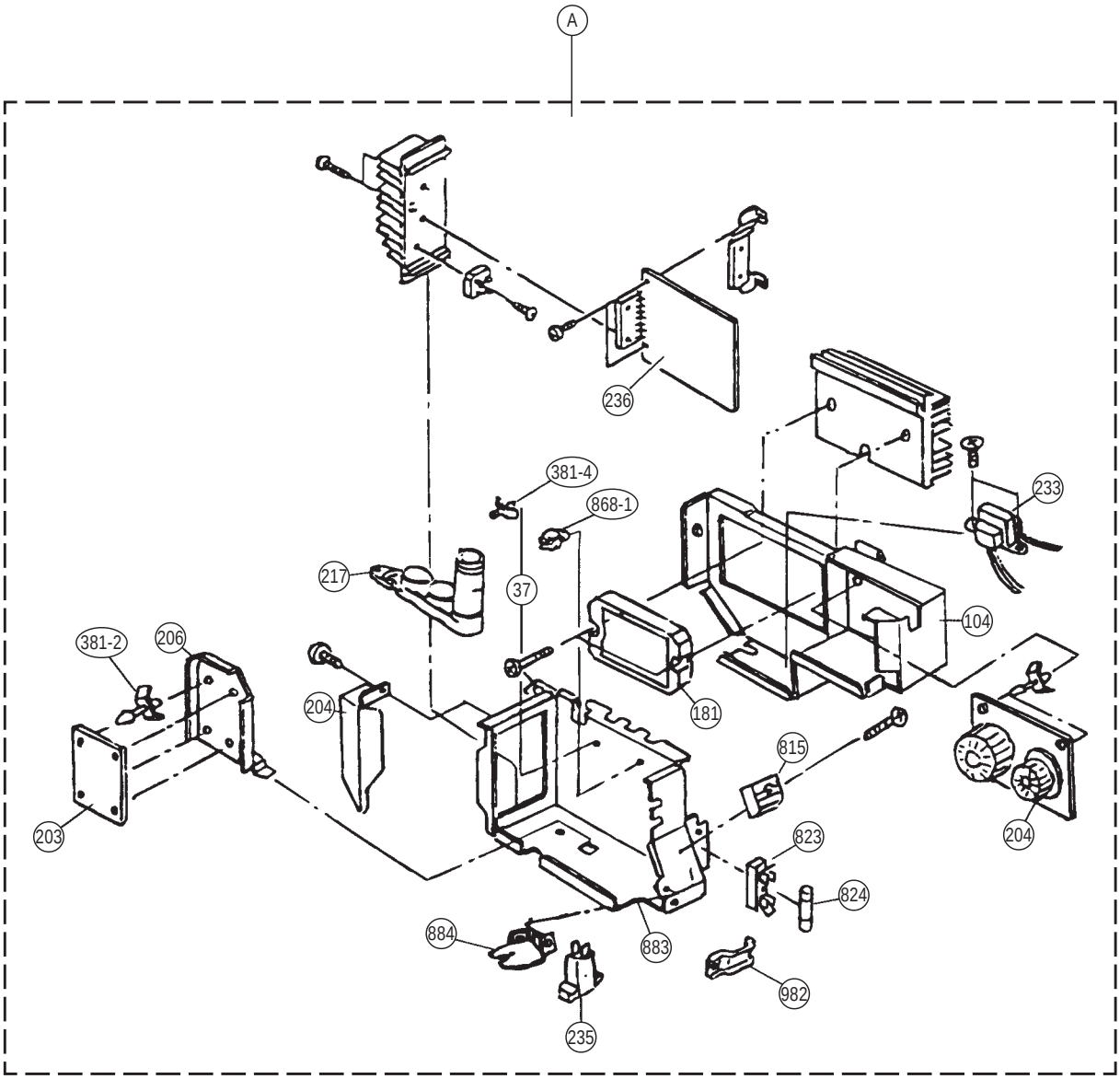

Replace the part having Ref. No.203 or 181 as stated in the parts list.
When necessary, replace the whole assembly having part No.9702486013(portion enclosed by dotted lines in the above illustration) since this assembly has been precisely adjusted before shipment from the factory.

Ref.No	Description	Part No.
203	PCB ASSY (A・F)	9702490010
181	ACTPM	9702612016
A	INVERTER ASSY	9702486013

Все каталоги и инструкции здесь: http://splitoff.ru/tehn-doc.html

DISASSEMBLY ILLUSTRATION

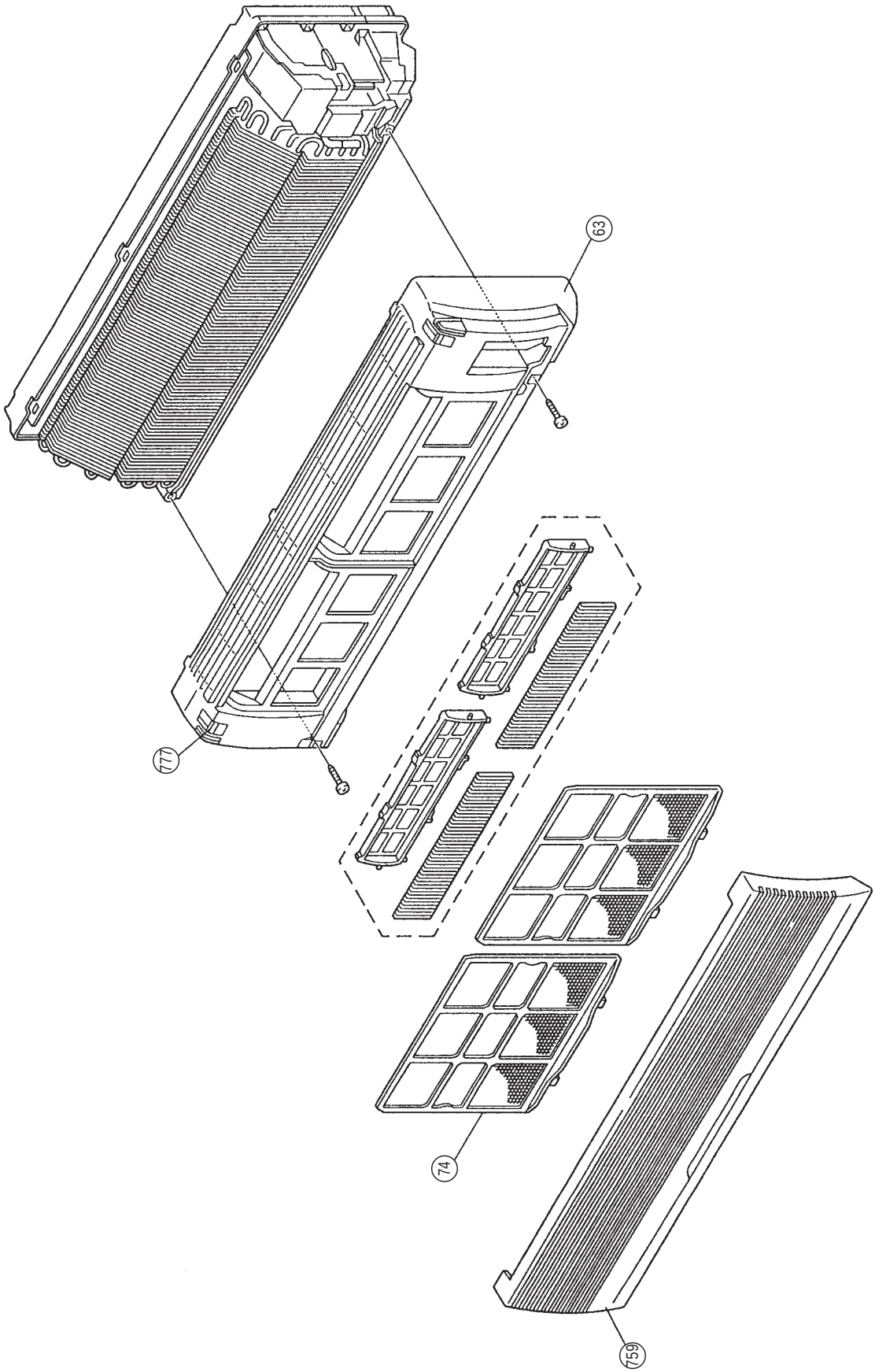

Все каталоги и инструкции здесь: http://splitoff.ru/tehn-doc.html

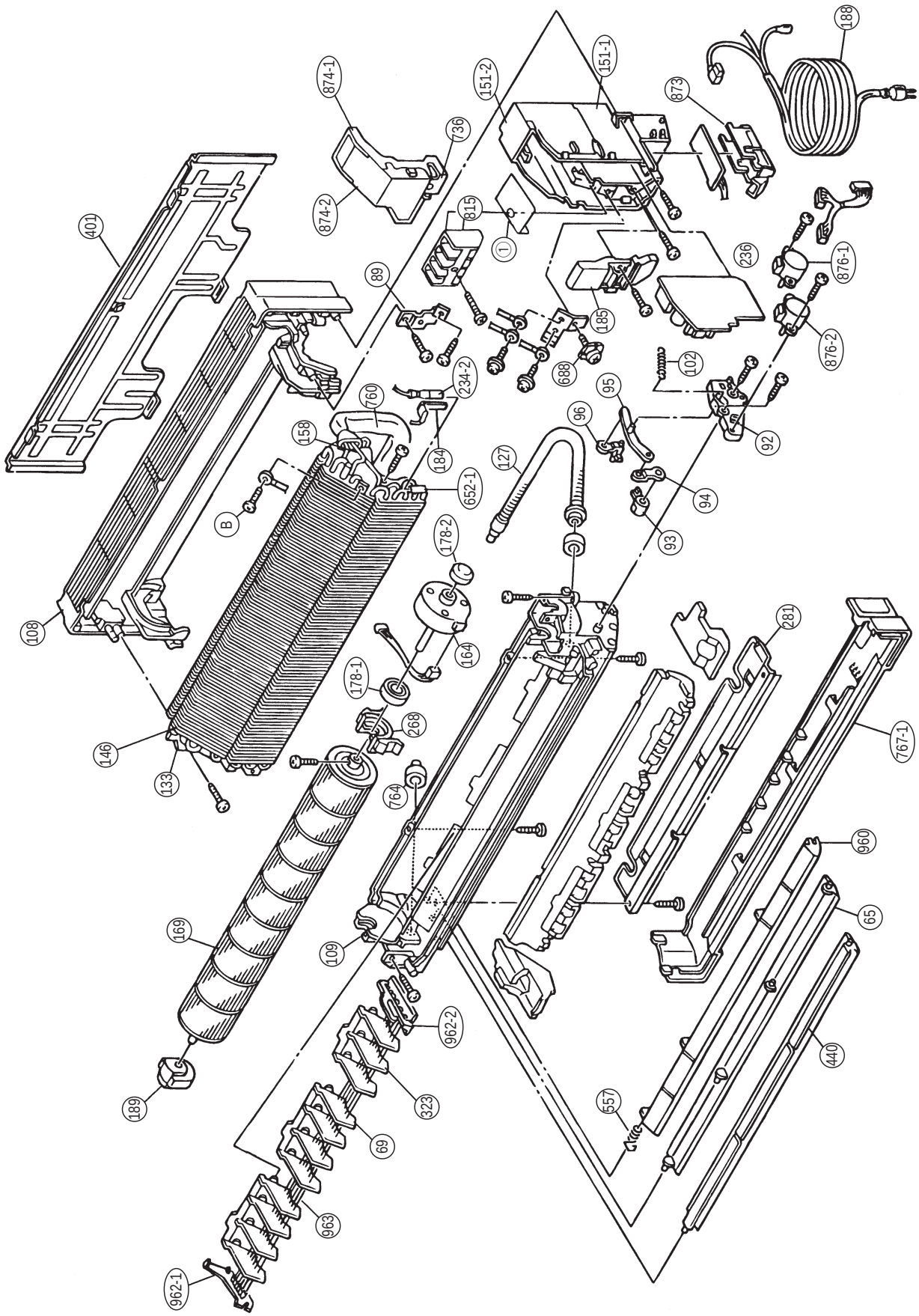

Все каталоги и инструкции здесь: http://splitoff.ru/tehn-doc.html

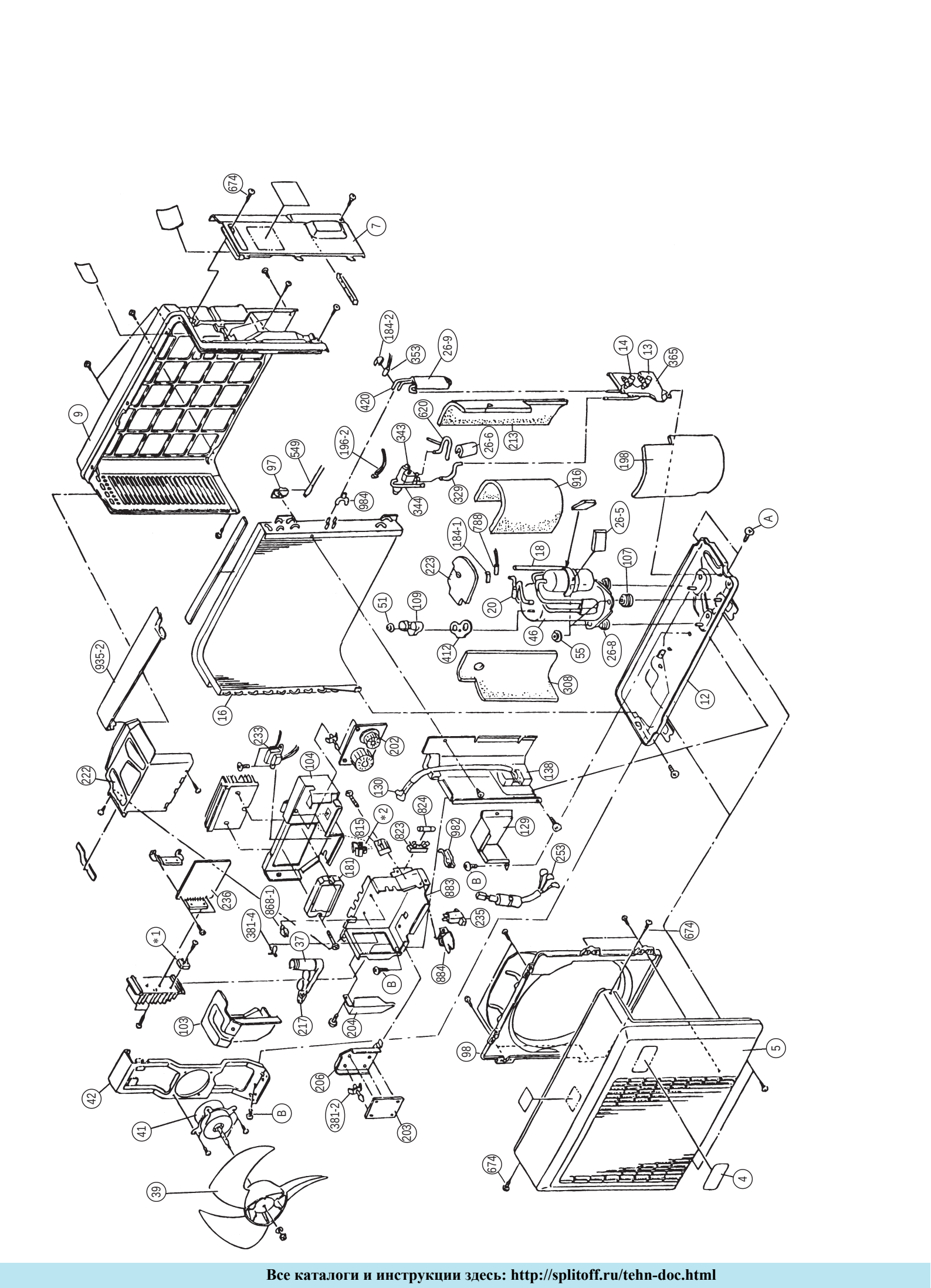

Все каталоги и инструкции здесь: http://splitoff.ru/tehn-doc.html

PARTS LIST

When you order parts, please make a photocopy of this page and fill the number of the parts in the ìOrderî column.

INDOOR UNIT

Ref. No.	Description	Parts No.	Ord. Q'ty	Ref. No.	Description	Parts No.	Ord. Q'ty
63	Front Panel Assy	9306817244		236	Controller PCB Assy	9702232016	
65	Flow Control Panel-Z	9306571016		268	Motor Cover-B	9306582012	
69	Louver-A	9306583019		281	Clamp Metal (Pipe)	9306607012	
74	Filter	9306601010		323	Louver-B	9306584016	
89	Casing Fixture	9307018008		401	Wall Hook Bracket	9306588014	
92	Link Plate	9306577018		440	Flow Control Panel-U	9306570019	
93	Link-A	9306573010		557	Diffuser Spring	9306611019	
94	Link-B	9306574017		652-1	Thermistor Holder Pipe	313714262805	
95	Link-C	9306575014		688	Screw (w/Square Washer)	313681304205	
96	Link-D	9306576011		736	Operation Panel	9306620011	
102	Link Spring	9306610012		759	Intake Grille	9306598068	
108	Base	9306566012		760	Insulation (Pipe) E	9304607007	
109	Casing	9306569013		764	Drain Cap Assy	9304150008	
127	Drain Hose Assy	9305550029		767-1	Bottom Cover-A	9306567019	
133	Evaporator Cover	9306606015		777	Intake Grille Clamp	9306755010	
146	Evaporator Assy	9307449017		815	Terminal	9701955077	
151-1	Control Box	9306590024		873	Lamp Cover	9306593018	
151-2	Control Box - Metal	9306594015		874-1	Control Box Cover, Plastic	9306591014	
158	Connecting Pipe Assy	9306669010		874-2	Control Box Cover, Metal	9306595012	
164	Fan Motor Assy-IN	9306829018		876-1	Step Motor	9305780006	
169	Cross-Flow Fan Assy	9305435012		876-2	Step Motor	9305892006	
178-1	Motor Cushion-A	9306751012		960	Diffuser	9306572013	
178-2	Motor Cushion-B	9306580018		962-1	Guard Holder-L	9307229015	
184	Thermistor Spring	313104262701		962-2	Guard Holder-R	9307228018	
185	Wire Clamp	9306592011		963	Fan Guard	9305751020	
188	Power Cord Assy	9702604011		①	Sheet-A	9307661006	
189	Shaft Holder-C Assy	9306628017		B	Screw (w/Spring Washer)	0700179013	
234-2	Thermistor Assy	9702039011					

OUTDOOR UNIT

Ref. No.	Description	Parts No.	Ord. Q'ty	Ref. No.	Description	Parts No.	Ord. Q'ty
4	Emblem-Rear	9309712010		206	PCB Fixture	9307587016	
5	Cabinet Front Panel	9305525010		213	Noise Insulation-B	9307674006	
7	Connector Cover	9306119010		217	Capacitor Holder	9306036027	
9	Cabinet Rear Panel	9305526017		222	Shield Plate	9305788002	
12	Base Assy, Painted	9306118082		223	Noise Insulation-D	9307719004	
13	3-Way Valve	9306802011		233	Power Transformer EZ-030HSE-T	9701803026	
14	2-Way Valve	9306800017		235	Thermistor PTC912X24E400XR20	0000726016	
16	Condenser Assy	9307083006		236	Inverter PCB Assy	9702487010	
18	Suction Pipe	9307260001		253	Wire Assy (Connector)	9702608019	
20	Discharge Pipe Assy	9307259005		308	Noise Insulation-C	9307675003	
26-5	BR Sheet	9305039012		329	Coupling Pipe	9307263002	
26-6	BR Sheet	9305039029		343	Solenoid Coil	9359616085	
26-8	BR Sheet	9305498093		344	4-Way Valve	313947302811	
26-9	BR Sheet	9305039067		353	Thermistor Assy	9701409020	
37	Cap. Elec. 420V 1300 F	9702609016		365	Bracket (Valve)	9306748012	
39	Propeller Fan	9305538003		381-2	Locking Spacer KGLS-8S	0600035020	
41	Fan Motor Assy-OUT	9300834285		381-4	Locking Spacer KGPS-6S	0600118075	
42	Bracket (Motor)	9305536023		412	Terminal Gasket	9351051013	
46	Compressor Assy	9307311017		420	Capillary Assy	9307125003	
51	Special Nut M5	9300301015		549	Thermistor Assy-Outer	9702606015	
55	Special Nut M8	313252257701		620	Inlet Pipe Assy	9307262005	
97	Terminal Holder	9307274015		674	Screw, Coated	9305848010	
98	Fan Ring	9305581016		688	Screw (w/Square Washer)	313681304205	
103	Active Filter Cover	9307825019		788	Thermistor - Discharge	9701945023	
104	Active Filter Case	9307577017		815	Terminal HP-T3031-5-L	9306489038	
107	Rubber Seat-A	9351049010		823	Fuse Holder FH-153A	0500487011	
109	Terminal Cover	9303553008		824	Fuse TLC25A-250V	0600086039	
129	Coil Cover	9307581014		868-1	PCB Holder 1680-0-0-518-01	0600172107	
130	Choke Coil	9702607012		883	Inverter Case	9307568015	
138	Separate Wall Assy	9307573019		884	Bracket (Thermistor)	9307582011	
181	IPM (Active Filter) ACTPM-EU	9702612016		916	Noise Insulation - G	9307676000	
184-1	Thermo. Spring-A	313728262708		935-2	Reinforcement-B	9307685002	
184-2	Therm. Spring	9300089012		982	Cord Clamp	9307271014	
196-2	Clamp SKB-3MC	9305335008		984	U-Pipe (Y)	9305523009	
198	Noise Insulation-A	9307673009		A	Screw (w/Washer)	9357297002	
202	Filter PCB Assembly	9702493011		B	Screw (w/Spring washer)	0700179013	
203	Active Filter PCB Assy	9702490010		*1.	IC S25VB60	0100122022	
204	Heat Sink Cover	9305534005		*2.	PCB Holder 2196-0-0-016-01	0600172206	

Note : Always use specified screws, since Ref. No. 688, A and B are screws for the earth.

Ref. No.688 : Machine screw (with square washer & spring washer) M4 x P0.7 x L10, plating thickness 5μ or more.
A : Tapping screw (with inner clip washer) M4 x L10, plating thickness 5μ or more.
B : Machine screw (with spring washer) M4 x P0.7xL10, plating thickness 5μ or more.

Все каталоги и инструкции здесь: http://splitoff.ru/tehn-doc.html

[INDOOR P.C.B.]

CONTROLLER PCB ASSEMBLY (Ref.No. 236)

When you order parts, please make a photocopy of this page and fill the number of the parts in the "Order" column.

Ref. No.	Description	Parts No.	Ord. Q'ty
IC1	IC μPD 78015FCW-019	9702932015	
IC2	IC μPC 7805AHF	0100008036	
IC3	IC HI2002	9701384020	
IC4	IC PS2561-1-V L	0000050456	
IC5	IC S-93C46ADFJ-TB	0101919027	
IC6	IC 3AA13	0101650104	
IC7	IC 3AC13	0101650111	
IC8	IC μPC 494C	0101582030	
IC9	IC NJM 2901M	0100534108	
IC10,IC11	IC M 54523FP 200D	0100013023	
IC12	IC PST 600CMT R	0101461120	
IC13	IC μPC 1093J-T	0101547039	
IC15	IC MA 3830 4104	0101774169	
IC17	IC NJM 2904M	0100534115	
Q1	Xstr 2SA854	0000780094	
Q3,Q4	Xstr DTC124EK	0000517034	
Q5	Xstr 2SB945	0000772723	
D1	Doide D3SB60	0000689045	
D2,D3,D12,D13,D21	Doide DAN202K	0000684019	
D4,D10,D19	Doide DA226U	0000625036	
D5,D6,D8	Doide D2FL20U	0000906500	
D7,D17	Doide D1F60	0000208024	
D9,D11	Doide S3L20U	0000876506	
R1	Res.Cement 3.3Ω±10%	0200153148	
R2	Res. 430Ω±5%	0200731650	
R3	Res.Carbon 1/2W 1.2M Ω±5%	0200011141	
R4	Res. 100kΩ±5%	0200213255	
R5,R6	Res.Metal 75Ω±5%	0201107713	
R7,R32	Res. 10Ω±5%	0200731261	
R8	Res. 1kΩ±1%	0200010014	
R9	Res. 15kΩ±1%	0200022185	
R10	Res.Metal 300Ω±5%	0201106396	
R11	Res. 4.7kΩ±5%	0200708904	
R12	Res. 1kΩ±5%	0200708744	
R14	Res. 20kΩ±5%	0200213088	
R15	Res. 100Ω±5%	0200731506	
R16-R18	Res. 4.7kΩ±5%	0200731902	
R19-R22,R37,R41	Res. 1kΩ±5%	0200212746	
43,R56-R61		0200212746	
73,R75,R80,R95		0200212746	
R23-R25	Res. 49.9kΩ±1%	0200279824	
R26	Res. 1kΩ±5%	0201107454	
R27	Res. 120kΩ±1%	0200280059	
R28,74	Res. 7.87kΩ±1%	0200279442	
R29	Res. 6.8kΩ±5%	0200708942	
R30	Res. 12.4kΩ±1%	0200279541	
R34	Res. 0.33Ω±5%	0201106037	
R35,R39,R44	Res. 10kΩ±5%	0200213019	
49-55,66,79		0200213019	
85,93		0200213019	
R36,R76	Res. 15.4kΩ±1%	0200279565	
R38	Res. 31.6kΩ±1%	0201114490	
R40,R62	Res. 47Ω±5%	0200212425	
R42	Res. 1.2kΩ±5%	0200708768	
R46	Res. 1kΩ±5%	0200731742	
R63-R65,R86	Res. 330Ω±5%	0200212623	

Ref. No.	Description	Parts No.	Ord. Q'ty
R68,R84	Res. 390Ω±5%	0200212647	
R69	Res. 33kΩ±1%	0200279732	
R70	Res. 2.2kΩ±1%	0200279176	
R71	Res. 22.1kΩ±1%	0200279664	
R72	Res. 33.2kΩ±1%	0200279749	
R87	Res. 22kΩ±5%	0200213095	
R91	Res. 10kΩ±1%	0200279497	
R94	Res. 3.9kΩ±5%	0200212883	
C1	Cap. Plastic 0.22 μF	0300304099	
C2,C4	Cap. Ceramic 1000pF	0300209073	
C5	Cap. Elec. 450V 100 μF	0300256039	
C6	Cap. Ceramic 0.01 μF	0300209127	
C7	Cap. Ceramic 2kV 1000pF	0301236351	
C8,C9	Cap. Plastic 50V 0.01 μF	0300576113	
C10	Cap. Plastic 50V 1000pF	0300576090	
C11,C36,C43,C46	Cap. Elec. 25V 10 μF	0300099339	
C12,C16	Cap. Elec. 25V 680 μF	0301196488	
C13	Cap. Elec. 63V 1000 μF	0300255254	
C14,20,21,23	Cap. Ceramic 50V 1000pF	0300308509	
26,38,42,45			
64,66,69-72			
C15	Cap. Ceramic 50V 20pF	0300309940	
C17,27,28,37	Cap. Ceramic 25V 0.1 μF	0300266748	
44,47,51,52,54			
55,73,75			
C18,C22,C58	Cap. Elec. 16V 100 μF	0300099377	
C19	Cap. Elec. 50V 680 μF	0301196815	
C29-C34,C25,C40	Cap. Ceramic 50V 0.01 μF	0300323113	
C61	Cap. Plastic 50V 0.033 μF	0300576199	
T1	Switching Transformer	9702351014	
	ETS29AF1K8AC		
L1	EMI Filter ELF15N010A	0400165088	
L2	Choke Coil SBC6-331-871	0400112662	
F1	Fuse BET 3.15A-250V	0600222512	
F2	Fuse TSCR 2.5A-250V F323	0600078089	
FH1,FH2	PFC5000-0502 SMK	0500158072	
K1	Relay DI12D1	9701067015	
SW1	Switch, Push KSM0632B	9703476013	
VA1	Varistor ERZ-V10V471CS	0000515139	
HT1	Heat Sink DPS35-30-1	9701939022	
BZ1	Buzzer PKM13EPY-4000-TF01	9701298013	
X1	Ceramic Resonator	9701261017	
	EF0EC8384T4		
CN1	Plug. PCB 53325-1010	0501052591	
CN3	Plug. PCB 53325-0510	0501052546	
CN4	Plug. PCB S3P-VH	0500011308	
CN6	Wire w/Connector	9702010010	
	2-173985-6 L=230		
CN7	Plug. PCB 53405-0210	0500940011	
CN8	Thermistor 150-103-86119	9700801078	
CN9	Thermistor 150-503-96056	9702039011	
CN10	Plug. PCB 53406-9910	0500951048	
W1	Wire w/Terminal WHT L=110	9701898015	
W2	Wire w/Terminal RED L=110	9701898022	
W3	Wire w/Terminal L=210	9701660018	

INDICATOR PCB ASSEMBLY

Ref. No.	Description	Parts No.	Ord. Q'ty
D101	Diode SLR-325VC RED	0000813259	
D102	Diode SLR-325MC GRN	0000813242	
D103	Diode SLR-325DC ORG	0000813235	
C101	Cap. Ceramic 25V 0.1 μF	0300266748	
C102	Cap. Elec. 25V 10 μF	0300099339	
X101	Remote control Amplifier	0101525129	
	SBX1810-22		

Все каталоги и инструкции здесь: http://splitoff.ru/tehn-doc.html

[OUTDOOR P.C.B.]

INVERTER PCB ASSEMBLY (Ref.No. 236)

When you order parts, please make a photocopy of this page and fill the number of the parts in the "Order" column.

Ref. No.	Description	Parts No.	Ord. Q'ty	Ref. No.	Description	Parts No.	Ord. Q'ty
IC1	IC MB 89855RP-G-196-SH	9702352042		C4	Cap. Elec. PF 25V 220 μF	0301197553	
IC4	IC uPA 2003GR E2	0100028041		C5,11-13,31,60	Cap. Elec. PF 16V 220 μF	0301197492	
IC5	IC PST 600DM TL	0101461137		C6	Cap. Elec. PR 16V 100 μF	0301192251	
IC6,7	Photocoupler PS2561-1-V L	0000050456		C8,51,52	Cap. Ceramic 50V 0.022 μF	0300311745	
IC8	IC TA 7805S TOSHI	0101597010		C14	Cap. Elec. PF 16V 680 μF	0301196358	
IC101	Power Transistor Module	0000062114		C16,19	Cap. Elec. PR 50V 4.7 μF	0301192534	
	MP6502-LB			C17-18,34,50	Cap. Ceramic 50V 0.01 μF	0300311738	
H-IC1	Hybrid IC HU2001	9701651016		C26-29	Cap. Elec. PF 50V 47 μF	0301197102	
H-IC2	Hybrid IC HU0001	9701348015		C33	Cap. Plastic 50V 0.01 μF	0300169254	
H-IC3	Hybrid IC HU0002	9701348022		C65-C68,C88-C89	Cap. Ceramic 50V 0.1 μF	0300311752	
Q1	Transistor 2SC4236 4009	0000164047		C80	Cap. Plastic 440V 2.5 μF	9702104023	
D1-D8	Diode D1FL20U 4063	0000746519		C101,C102	Cap. Ceramic 0.015 μF	0301052081	
D10	Diode RD5.6ES B2	0000520041		C100,C103	Cap. Plastic 1 μF	0300304136	
D28	Diode TLR124	0000467025		C104	Cap. Plastic 0.22 μF	9702651015	
D30-D32,D60	Diode DA226U	0000625036		F1	Fuse ATLCR 15A-250V	0600036027	
R1,R101	Res. Metal 2W 220kΩ±5%	0200357096		F2	Fuse BET 3.15A-250V	0600222512	
R2	Res. Metal Oxide 2W 1kΩ±5%	0200045092		FH2	Fuse Holder PFC5000-0502	0500158072	
R3	Res. 1/2W 100Ω±5%	0200731506		T1	Switching Transformer	9702333010	
R4	Res. 1/4W 330Ω±5%	0200708621			ETS28KK1D8AG		
R5,50-51,62	Res. 1/10W 10kΩ±5%	0200213019		CT1	Transformer CT-1A	9702334017	
64,66,81-89				K2	Relay G5S-1 DC12V	9701925018	
93-98				K3,K4	Relay G5N-1A DC12V	9701566013	
R30	Res. 1/4W 20Ω±1%	0201092309		K101	Relay G4A-1A-P-PS	9701717019	
R31	Res. 1/4W 220Ω±1%	0200005300		L1	Coil FK-140M-5020HR	9702335014	
R32	Res. 1/10W 100Ω±1%	0200278452		CR1,CR2	CR Absorber RPEL-121204 -C	9701125012	
R33,R39	Res. 1/10W 47kΩ±5%	0200213170		X1	Ceramic Resonator EFO-EC8004T4	0400004011	
R34,40,52-53,72	Res. 1/10W 1kΩ±5%	0200212746		CN10	Plug, PCB B7P-VH-B	0500011117	
R37	Res. 1/4W 130Ω±1%	0200005126		CN20	Wire P7 L=240	9702643010	
R38	Res. 1/4W 154Ω±1%	0200005195		CN21	Wire P6 L=120	9702635015	
R60	Res. 1/10W 1.5kΩ±1%	0200279091		CN30	Plug, PCB B2P3-VH-B-C	0500011773	
R61	Res. 1/10W 3.74kΩ±1%	0201113561		W1	Wire BLK L=220	9702629014	
R63	Res. 1/10W 3.65kΩ±1%	0201113806		W2	Wire WHT L=170	9702630010	
R65	Res. 1/10W 56kΩ±1%	0200279855		W3	Wire GRN L=140	9702627010	
R67	Res. 1/10W 38.3kΩ±1%	0201114575		W4	Wire Assy RED L=195	9701703036	
R68	Res. 1/10W 22kΩ±5%	0200213095		W5	Wire ORG L=310	9702631017	
R73	Res. 1/10W 82kΩ±5%	0200213231		W6	Wire GRY L=250	9702632014	
R80	Res. 1/10W 2.2kΩ±5%	0200212821		W7,8	Wire ORG L=160	9702644017	
R102,103	Res. Cement 5W 0.3Ω±5%	0200207117		W12	Wire YEL L=290	9702637019	
VR1	Semi - Fixed KVSF687A B2K	0200947013		W13	Wire BLU L=190	9702636012	
C1	Cap. Ceramic 2kV 220pF	0301236276		W24-W25	Wire P3 L=320	9702642013	
C2,30,32	Cap. Plastic 50V 0.047 μF	0300169339		W103,104,105	Wire Assy P3 L=110	9701436026	
C3	Cap. Elec. PF 16V 100 μF	0301197454		JM105,JM106	Wire SN-PLATED L=7.5mm	9701076017	

FILTER PCB ASSEMBLY (Ref.No. 202)

Ref. No.	Description	Parts No.	Ord. Q'ty	Ref. No.	Description	Parts No.	Ord. Q'ty
IC405	IPM (Activ Filter) ACTPM-EU	9702612016		CN202	Plug. PCB B2P3-VH-B-Y	0500011827	
C201	Cap. Plastic 1 μF	0300304136		W201	Wire WHT L=190	9702639013	
SA201	Arrester RA-302M-V7-F	0600280147		W202	Wire BLK L=210	9702640019	
VA201,VA202	Varistor ERZ-V10V471CS	0000515139		W203	Wire GRN L=170	9702628017	
TM201,TM202	Plug Contact 86028	0500536016		W206-W207	Wire P3 L=430	9702626013	
L201	Coil Fk-150M-3320HR	9702610012		JM200	Wire SN-PLATED L=10mm	9700025016	
L202	Coil SKC-4019	9702611019					

Все каталоги и инструкции здесь: http://splitoff.ru/tehn-doc.html

STANDARD ACCESSORIES

Name and Shape	Part No.
Wall hook bracket	9306588014
Wall cap-B	313714296205
Remote control unit	9307113086
Remote control unit holder case	9305642014
Battery (penlight)	313187358304
Cloth tape	9304232001
Seal-A	9304536000
Tapping screw (big) (ø4 x 25)	0700076046
Tapping screw (small) (ø3 x 12)	301141533125
Allen wrench	9351228019
Drain pipe (including drain packing)	9303029015

Все каталоги и инструкции здесь: http://splitoff.ru/tehn-doc.html

MANUFACTURER :

Fuji Denki Sosetsu Co., Ltd.

Tokyo, Japan

June 2000 Printed in Japan

Большая библиотека технической документации
http://splitoff.ru/tehn-doc.html
каталоги, инструкции, сервисные мануалы, схемы.